www.blackanddecker.com

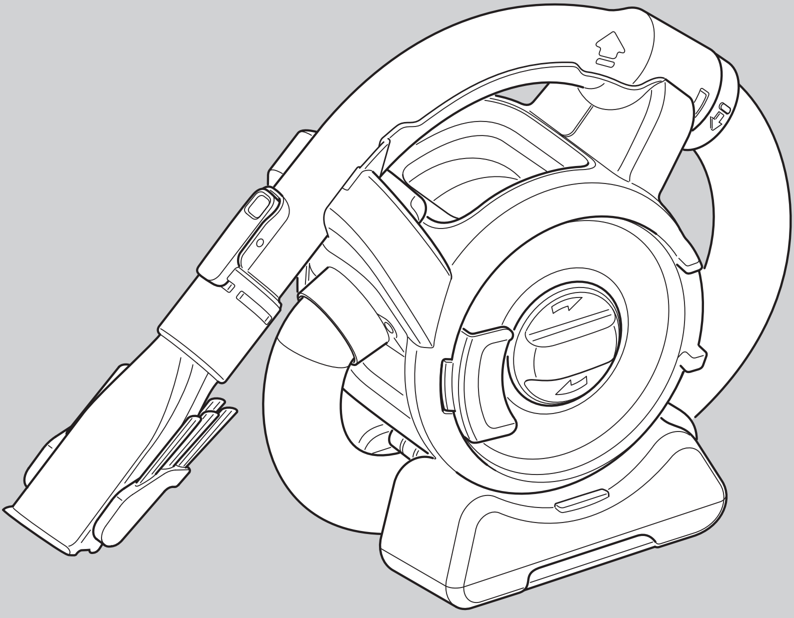

PD1200B

English 3
简体中文 7

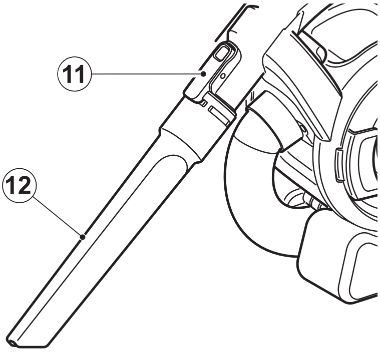

A

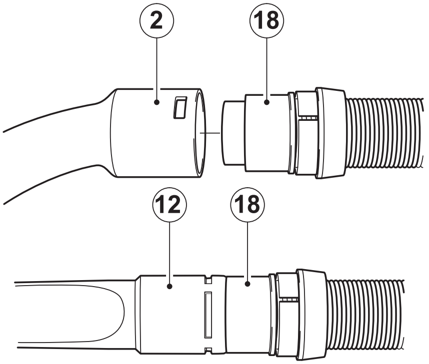

B

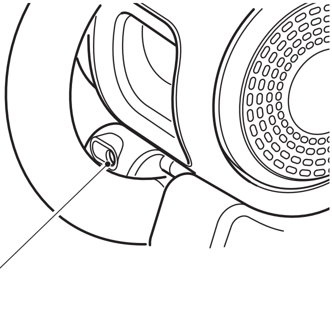

C

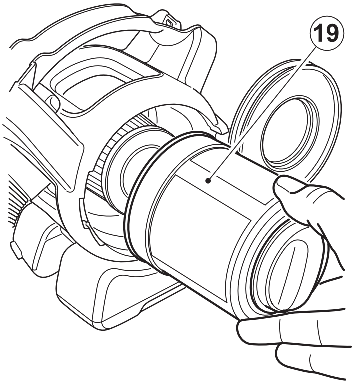

D

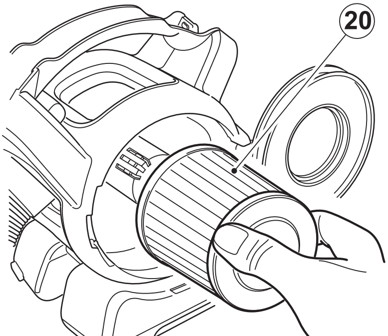

E

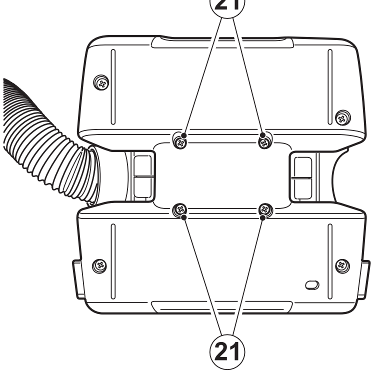

F

BLACK & DECKER	PD1200B	TYP. 1

Partial support - Only parts shown available
Nur die aufgefuerten teile sind lieferbar
Reparation partielle - Seules les pieces indiquees sont disponibles
Supporto parziale - Sono disponibili soltanto le parti evidenziate
Solo estan disponibles las peizas listadas
So se encontram disponiveis as pecas listadas
Gedeeltelijke ondersteuning - alleen de getoonde onderdelen zijn beschikbaar

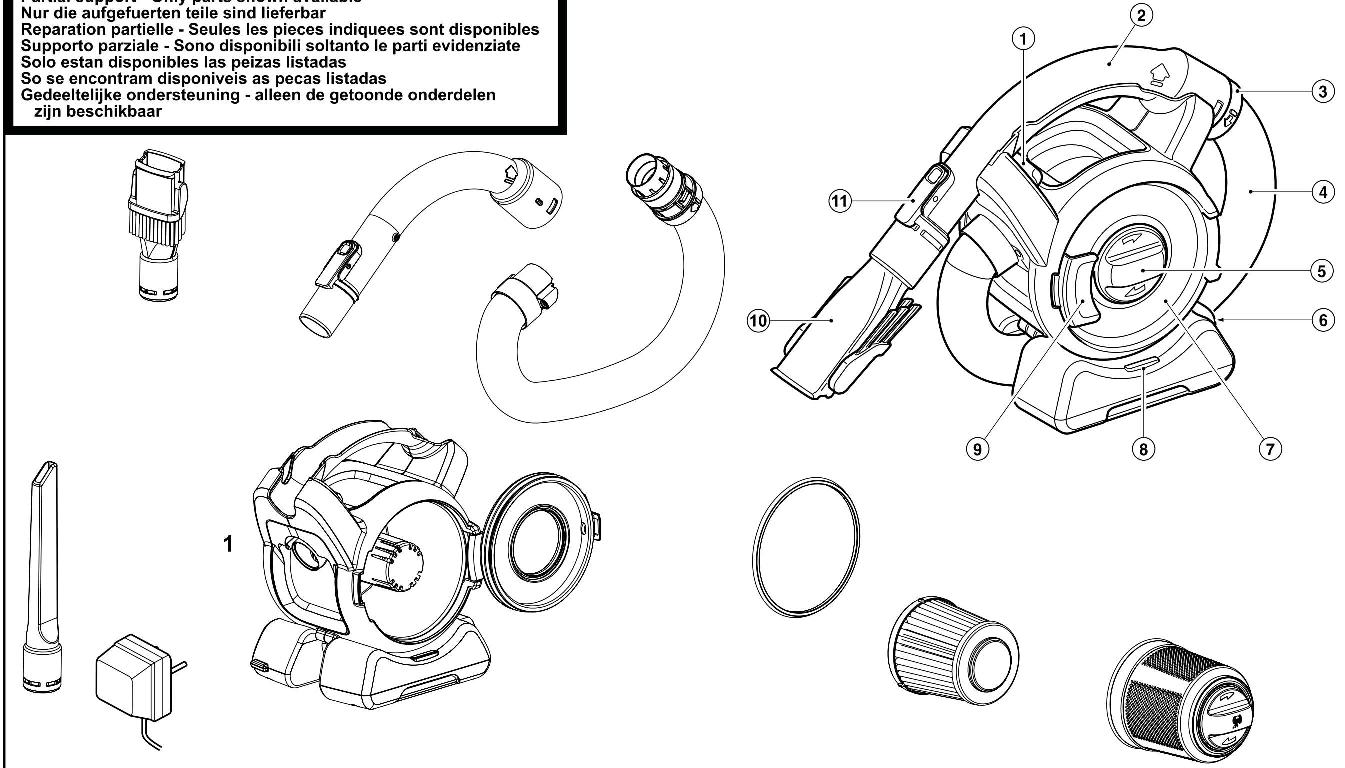

©

E15650	www.2helpU.com	27 - 02 - 09

Dustbuster FLEXI 12 Volt Vacuum Cleaner

Technical data

		PD1200
Voltage	Vdc	12
Weight	kg	1.8

Charger		
Input voltage	Vac	220
Approx. charging time	h	16
Weight	kg	0.2

Intended use

Your Black & Decker Dustbuster Flex vacuum cleaner has been designed for dry vacuum cleaning purposes. This appliance is intended for household use only.

Safety instructions

Warning! When using battery-powered appliances, basic safety precautions, including the following, should always be followed to reduce the risk of fire, leaking batteries, personal injury and material damage.

- Read all of this manual carefully before using the appliance.
- The intended use is described in this manual. The use of any accessory or attachment or the performance of any operation with this appliance other than those recommended in this instruction manual may present a risk of personal injury.
- Retain this manual for future reference.

Using your appliance

- Do not use near water.
- Do not use the appliance to pick up liquids or any materials that could catch fire.
- Do not immerse the appliance in water.
- Never pull the charger lead to disconnect the charger from the socket. Keep the charger lead away from heat, oil and sharp edges.
- This tool is not intended for use by persons (including children) with reduced physical, sensory or mental capabilities, or lack of experience and knowledge, unless they have been given supervision or instruction concerning use of the appliance by a person responsible for their safety. Children should be supervised to ensure that they do not play with the appliance.

After use

- Unplug the charger before cleaning the charger or charging base.
- When not in use, the appliance should be stored in a dry place.
- Children should not have access to stored appliances.

Inspection and repairs

- Before use, check the appliance for damaged or defective parts. Check for breakage of parts, damage to switches and any other conditions that may affect its operation.
- Do not use the appliance if any part is damaged or defective.
- Have any damaged or defective parts repaired or replaced by an authorized repair agent.
- Regularly check the charger lead for damage. Replace the charger if the lead is damaged or defective.
- Never attempt to remove or replace any parts other than those specified in this manual.

Additional safety instructions for batteries and chargers

Battery and charger

- Never attempt to open for any reason.
- Do not expose the battery to water.
- Do not short circuit the charging terminals on the vacuum cleaner bowl or the charging unit.
- Do not store in locations where the temperature may exceed 40°C.
- Charge only at ambient temperatures between 10°C and 40°C.
- Do not incinerate the battery.
- When disposing of batteries, follow the instructions given in the section "Protecting the environment".
- Have defective cords replaced immediately.
- Do not expose the charging base to water.
- Do not open the charging base.
- Do not probe the charger.

Electrical safety

Your charger has been designed for a specific voltage. Always check that the mains voltage corresponds to the voltage on the rating plate. Never attempt to replace the charger unit with a regular mains plug.

This appliance is double insulated; therefore no earth wire is required. Always check that the power supply corresponds to the voltage on the rating plate.

The charger is intended for indoor use only.

Read the instruction manual before use.

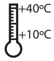

Charge only at ambient temperatures between 10°C and 40°C.

Features

This appliance includes some or all of the following features.

1. On/off power switch
2. Removable hose/handle
3. Locking ring
4. Hose
5. Filter cleaning wheel
6. Charging inlet
7. Transparent door
8. LED charging indicator
9. Door latch
10. 2-in-1 combi nozzle accessory
11. Accessory clip
12. Crevice tool

Assembly

Mounting accessories (fig. A & B)

The 2-in-1 combi nozzle (10) has a brush that can be folded forward for dusting and upholstery cleaning.

The crevice tool (12) allows for vacuuming in narrow and hard to-reach places.

- To fit an accessory press the accessory clip (11) and slide the accessory onto the handle (2).
- To remove an accessory, press the accessory clip (11) and remove the accessory.

The handle (2) can be removed from the hose (4) allowing the accessories to be connected directly to the hose cuff (18) when required. To remove the handle:

- Unclip the handle (2) from the appliance.
- Rotate the locking ring (3) anti-clockwise to release the clips.
- Pull the hose (4) away from the handle (2).
- Fit the accessory directly to the hose cuff (18).

To refit the handle:

- Remove the accessory from the hose.
- Push the hose (4) into the handle (2). Rotate the locking ring (3) clockwise until it clicks into place.

Use

Before first use, the batteries must be charged for at least 16 hours.

- Connect the appliance to the charger for a minimum of 16 hours.
- Charge the batteries as described below.

You may need to charge/discharge the appliance a minimum of 5 times in order to achieve the best running time performance.

Charging the battery (fig. C)

Warning! Do not charge the battery at ambient temperatures below 10°C or above 40°C.

To charge the appliance:

- Make sure that the appliance is switched off. The battery will not be charged with the on/off power switch (1) in the on position.
- Insert the plug into the charging inlet (6) in the base.
- Plug in the charger and switch on at the mains.
- The charging indicator (8) will be lit.
- For the first charging, leave the appliance to charge for at least 16 hours.

Switching on and off

- To switch the appliance on, slide the on/off power switch (1) to the right to position 1.
- To switch the appliance off, slide the on/off power switch (1) to the left until it clicks into the off position.

Vacuuming

- When operating the appliance, make sure that the hose is not trapped, twisted or blocked.
- The handle (2) can be easily removed from the appliance allowing you to reach up to 1.5 m from the appliance.
- With the handle (2) removed, the appliance can be carried using the built-in handle.
- The handle (2) can also be removed from the hose (4) so that you can connect an accessory directly to the hose cuff (18) when required.

Hints for optimum use

- When vacuuming stairs, always start at the bottom and work your way up.

Optimising the suction force

In order to keep the suction force optimised, the filters must be cleared regularly during use.

- Turn the filter cleaning wheel (5) two turns clockwise to remove out any dust from the filters.
- The fine particulate filter must be cleaned regularly, see “Cleaning the fine particulate filter” section.

Cleaning and maintenance

Emptying the dust container (fig. D)

The dust container must be emptied regularly, preferably after every use.

- Release the door catch (9) and open the transparent door (7) 180° until it clicks in the open position.
- Remove the pre-filter (19).
- Empty the dust container.

- Clean the pre-filter (19) by lightly shaking over a dustbin.
- Refit the pre-filter (19).
- Close the transparent door (7) and make sure that it clicks into place.

Warning! Do not, under any circumstances, rinse out the dust container.
Warning! Do not immerse the appliance in water. A damp cloth and soapy water should be used to clean the exterior of the appliance. Always make sure that the appliance is completely dry before re-use or storing.

Cleaning the fine particulate filter (fig. E)

The fine particulate filter (20) prevents particles and larger objects from entering the motor housing.

The filter (20) is re-usable and should be cleaned regularly.

- Remove the pre-filter (19) from the appliance as described above.
- Remove the fine particulate filter (20) by pulling firmly.
- Tap the filter vigorously to remove loose dust from the filter.
- If necessary, wash the filter in warm, soapy water.
- Make sure that the filters are dry.
- Refit the fine particulate filter (20) on to the appliance.
- Refit the pre-filter (19) as described above.

Replacing the filters

The filters should be replaced every 6 to 9 months and whenever worn or damaged. Replacement filters are available from your Black & Decker dealer (cat. no. PD10):

- Remove the old filters as described above.
- Fit the new filters as described above.

Protecting the environment

Separate collection. This product must not be disposed of with normal household waste.

Should you find one day that your Black & Decker product needs replacement, or if it is of no further use to you, do not dispose of it with household waste. Make this product available for separate collection.

Separate collection of used products and packaging allows materials to be recycled and used again. Re-use of recycled materials helps prevent environmental pollution and reduces the demand for raw materials.

Local regulations may provide for separate collection of electrical products from the household, at municipal waste sites or by the retailer when you purchase a new product.

Black & Decker provides a facility for the collection and recycling of Black & Decker products once they have reached the end of their working life. To take advantage of this service please return your product to any authorised repair agent who will collect them on our behalf.

You can check the location of your nearest authorised repair agent by contacting your local Black & Decker office at the address indicated in this manual. Alternatively, a list of authorised Black & Decker repair agents and full details of our after-sales service and contacts are available on the Internet at: **www.2helpU.com.**

Batteries

Black & Decker batteries can be recharged many times. At the end of their useful life, discard batteries with due care for our environment.:

If you want to dispose of the product yourself, the batteries must be removed as described below and disposed of in accordance with local regulations.

- Discharge the battery by operating the appliance until the motor stops.
- Invert the appliance to get access to the screws that attach the base (fig. F).
- Remove the 8 screws (21).
- Remove the base.
- Disconnect the 3-pin connector.
- Place the battery in suitable packaging to ensure that the terminals cannot be short-circuited.
- NiCd batteries are recycla ble. Take them to any authorised repair agent or a local recycling station.

Guarantee

Black & Decker is confident of the quality of its products and offers an outstanding guarantee. This guarantee statement is in addition to and in no way prejudices your statutory rights. The guarantee is valid within the territories of the Member States of the European Union and the European Free Trade Area.

If a Black & Decker product becomes defective due to faulty materials, workmanship or lack of conformity, within 24 months from the date of purchase, Black & Decker guarantees to replace defective parts, repair products subjected to fair wear and tear or replace such products to make sure of the minimum inconvenience to the customer unless:

- The product has been used for trade, professional or hire purposes.
- The product has been subjected to misuse or neglect.
- The product has sustained damage through foreign objects, substances or accidents.
- Repairs have been attempted by persons other than authorised repair agents or Black & Decker service staff.

To claim on the guarantee, you will need to submit proof of purchase to the seller or an authorised repair agent. You can check the location of your nearest authorised repair agent by contacting your local Black & Decker office at the address indicated in this manual. Alternatively, a list of authorised Black & Decker repair agents and full details of our after-sales service and contacts are available on the Internet at:

www.2helpU.com

Please visit our website **www.blackanddecker.co.uk** to register your new Black & Decker product and to be kept up to date on new products and special offers. Further information on the Black & Decker brand and our range of products is available at **www.blackanddecker.co.uk**.

Dustbuster FLEXI 12伏旋风充电式吸尘器

技术参数

		PD1200
电压	伏（直流）	12
重量	千克	1.8

充电器		
输入电压	伏（交流）	220
充电时间约	小时	16
重量	千克	0.2

设计用途

本百得Dustbuster FLEXI旋风充电式吸尘器的设计用途是干燥条件下的吸尘. 本工具仅限家用。

安全须知

警告：当使用充电电器用品，应遵守下列的基本安全措施以减低火灾、电源泄漏、人身伤害及物件损坏的危险。

使用前应通读下列所有指示。

本吸尘器的设计用途已在本说明书中列明，使用任何非本说明书推荐的配件、或以本吸尘器作为设计用途以外的用途，将会构成人身伤害的危险。

请保留本说明书以作日后参考。

使用守则

- 操作时吸尘器的吸尘口及散热口不可与眼睛或耳朵接近。
- 切勿让吸尘器暴露在雨中。
- 切勿使用无滤尘网的吸尘器。滤尘网若损坏，请及时更换。
- 切勿伸展过远操作，在楼梯上吸尘时应格外小心。双脚站稳，随时保持平衡。
- 切勿使用吸尘器吸正在燃烧或冒烟的东西，如烟蒂、火柴或热的灰烬。
- 切勿在有易爆或易燃的物体或液体附近操作吸尘器。马达所产生的火花会点燃火种。
- 切勿用吸尘器来吸取有毒物质或如汽油等的易燃液体，也不可在这些易燃液体可能存在的地方吸尘或吸液体。
- 切勿让小孩把本产品视为玩具，当本产品在接近小孩的地方使用、或小孩在使用时，成人应紧贴监督。
- 只可如本说明书所述使用本产品，只可使用厂商推荐的附件。
- 请马上停止使用有下列情况的吸尘器：电源线或充电插头损坏、吸尘器不能正常操作、曾掉在地上、遗留在室外、掉入水中或遭受任何损坏：应把它送往维修。
- 切勿把外物放在吸尘器的任何孔中。切勿使用任何已堵塞的吸尘器：吸尘器的孔洞应无尘、亚麻布、头发及任何会阻碍空气流动的外物。
- 应把头发、宽松的衣服、手指或身体任何一部份远离开启的或移动的部件。
- 手湿时切勿触摸充电插头或电气。
- 切勿猛力拉扯电线以使充电器插座脱离电源、或使充电接头脱离吸尘器，应紧握充电器插座或充电接头然后把它拨出。充电器（包括插座、电线及充电接头）应远离热源、油脂及尖锐的边缘。
- 应关掉吸尘器才装上配件。
- 切勿为接上电源的充电用品吸尘。
- 切勿使用下列任何情况的吸尘器，电线或充电器损坏、发现机件故障、遗留在室外、曾点在水中或有任何损坏：请把吸尘器送往维修。
- 只可吸干物的吸尘器，切勿在室外使用或用它吸取液体；干湿两用吸尘器也不可在室外使用。
- 切勿让电源悬挂在枕边或接触热的表面，本吸尘器应放置或悬挂在远离水槽或热的地方。
- 切勿试图吸取尖锐的物件以致损坏吸尘器或滤尘网。
- 在楼梯上吸尘时应格外小心。

检查与维修

- 使用前，检查工具是否受损或存在缺陷部件。检查部件是否破裂、开关是否损坏，是否存在影响使用的其它情况。
- 如果部件损坏或存在缺陷，切勿使用工具。
- 损坏或缺陷部件必须交由授权维修代理处维修与更换。
- 定期检查充电器导线是否损坏。如有损坏与缺陷，请更换充电器。
- 禁止试图拆卸或更换本手册规定之外的任何部件。

电池组和充电器安全附则

电池与充电器

- 禁止以任何理由试图打开。
- 电池禁止与水接触。
- 充电式吸尘器滚筒及充电单元上的充电端子禁止短路。
- 禁止存放在温度可能超过40℃的地点。
- 仅可在10℃到40℃的环境温度范围内充电。
- 禁止焚烧电池。
- 丢弃电池时，请遵守“保护环境”章节中的规定。
- 电源线一旦损坏，应立即更换。
- 充电座禁止暴露在水中。
- 请勿打开充电座。
- 请勿使用探针等查探充电器。

电气安全
充电器根据特定电压设计。请随时检查主电网电压是否与标牌上的电压一致。切勿将充电器单元改造成普通电源插头。

本工具为双重绝缘，因此无须接地线。随时检查并确保电源电压与铭牌上的使用电压相符。

本充电座仅限室内使用。

使用工具前，请仔细阅读使用手册。

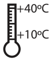

仅可在10℃到40℃的环境温度范围内充电。

部件名称
本工具包含下列部分或全部部件。
1. On/off电源开关
2. 可拆装软管/手柄
3. 锁定环
4. 软管
5. 过滤器清洁轮
6. 充电插座
7. 透明门
8. LED充电指示灯
9. 门销
10. 二合一吸尘嘴
11. 卡栓
12. 细缝吸头

组装

安装配件（图A、B）
二合一吸尘嘴（10）配有可向前打开的刷子，用于吸尘和清洁家居饰品。
细缝吸头（12）适合于狭窄、受限场所。
- 要安装配件，按下卡栓（11），同时把配件滑动安装到手柄（2）上。
- 要拆下配件，按下卡栓（11），同时把配件取下。

必要时，手柄（2）可从软管（4）上取下，使配件能够直接安装到软管管口（18）上。手柄的拆卸步骤如下：
- 打开手柄（2）在工具上的卡子。
- 逆时针旋转锁定环（3），释放卡子。
- 把软管（4）从手柄（2）上拉下。
- 把配件直接安装到软管管口（18）上。

重新安装手柄的步骤：
- 从软管上取下配件。
- 把软管（4）推装到手柄（2）上。顺时针旋转锁定环（3），直至锁定到位。

使用步骤
首次使用前，电池必须充电至少16小时。
- 工具与充电器连接至少16小时。
- 按如下步骤给电池充电。

为了达到最佳使用性能，您可能需要给工具充电/放电至少5次。

电池充电（图C）
警告！环境温度低于10℃或高于40℃时，切勿充电。

充电步骤：
- 确保工具开关关闭。 on/off开关(1)打开状态下，电池不能充电。
- 把插头插入充电座的充电插座（6）上。
- 插上充电器插头并打开主电网电源。
- 充电指示灯（8）亮。
- 首次充电时，至少充电16小时。

打开与关闭
- 要打开工具，把on/off开关（1）向右滑动到“1”位置即可。
- 要关闭工具，把on/off开关（1）向左滑动，直至卡入off位置即可。

真空吸尘
- 操作工具时，确保软管无障碍、扭转或堵塞。
- 手柄（2）可从工具上方便地取下，到达距工具1.5米远的地方。
- 手柄（2）取下后，可以使用工具自身手柄来搬动工具。
- 手柄（2）也可从软管（4）上取下，以便必要时把配件直接安装到软管管口（18）上。

最佳应用提示
- 清洁楼梯时，始终自下而上作业。

吸尘力优化
为了达到最佳吸尘力，使用过程中必须定期清洁过滤器。
- 顺时针转动过滤器清洁轮（5）两圈，使灰尘脱离过滤器。
- 必须定期清洁微尘过滤器，具体内容见“清洁微尘过滤器”。

清洁与维护

清空集尘室（图D）
集尘室必须定期清空，最好每次使用后都清空。
- 释放门销（9），打开透明门（7）180°，直至发出咔嗒声并进入打开位置。
- 取下预过滤器（19）。
- 清空集尘室。
- 在垃圾箱上方轻轻摇动预过滤器（19），进行清洁。
- 重新安装预过滤器（19）。
- 关闭透明门（7），确保其锁定到位。

警告！任何情况下，均禁止冲洗集尘室。
警告！本工具禁止浸入水中。可用湿布和肥皂水来清洁工具外部。再次使用或存放工具前，请务必确认工具完全干燥。

清洁微尘过滤器（图E）

微尘过滤器（20）可以防止颗粒和较大物体进入马达壳内。
过滤器（20）可以重复使用，应定期清洁。
- 按照上述步骤，从工具上取下预过滤器（19）。
- 用力拉微尘过滤器（20），把它取下。
- 用力轻拍过滤器，清除松散灰尘。
- 必要时，使用温肥皂水清洗过滤器。
- 确保过滤器干燥。
- 把微尘过滤器（20）重新安装到工具上。
- 按照上述步骤，重新安装预过滤器（19）。

更换过滤器

每6到9个月，或当滤芯磨损、损坏时，即应更换滤芯。百得零售商可提供滤芯备件（商品编号：PD10）:
- 按上述步骤取下旧滤芯。
- 按上述步骤安装新滤芯。

保护环境

分类回收。此类产品不得和普通家庭垃圾一起处理。
当您的百得产品需要更换或不再使用时，请不要把它和家庭垃圾一起处理。把该产品单独分类回收。

旧产品和旧包装的分类回收使材料能够得以再循环和再利用。再循环材料的重新利用有助于防止环境污染和减少原料需求。
在市政垃圾场或您购买新产品的零售商处，地方法规可能要求电器产品与生活垃圾分开回收。
百得提供设施来收集、回收使用寿命到期的百得产品。要利用本服务，请将产品送往任何授权维修中心，他们代表百得回收产品。
您可与本手册中的当地百得地址联系，查找最近的授权维修中心的位置。此外，也可以登录互联网：www.2helpU.com, 查看百得授权维修代理的办公室清单，以及我们售后服务的详细资料与联系方式。

电池组

百得电池可以多次充电。其使用寿命终结时，要小心处理，注意保护环境：

如果您打算自行处理本产品，必须按如下步骤取下电池并根据本地法规处理。
- 运行工具给电池放电，直至马达停止。
- 倒置工具，可以看到连接底座的螺钉（图F）。
- 取下这8个螺钉（21）。
- 取下底座。
- 断开3针接头。
- 把电池置于合适的包装内，确保电极不会短路。
- NiCd电池是可以回收的。把它们交给授权维修代理处或本地回收站处理。